Indicator & Horn Interface

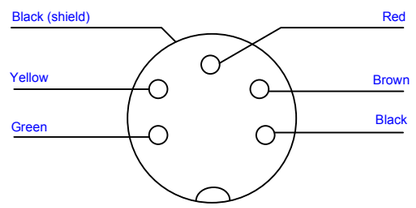

Plug 1 (Pin View)

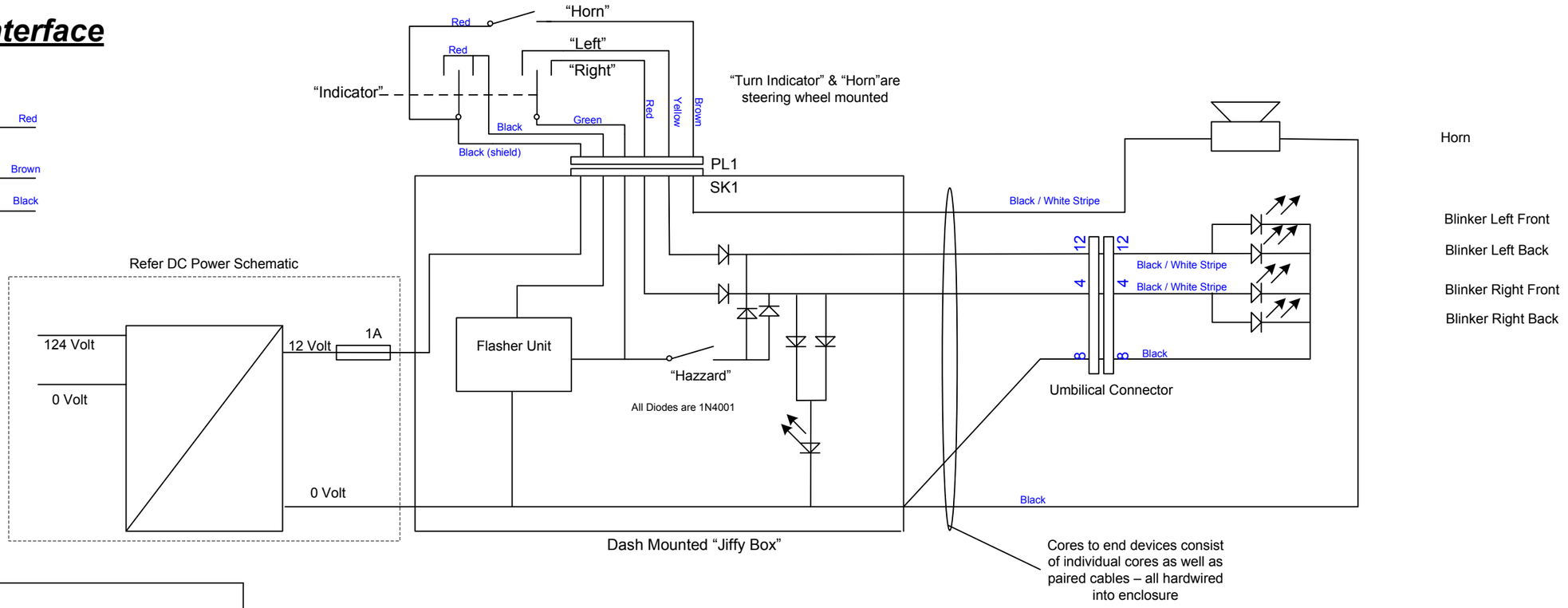

CAN Driver Controller to Driver Interface Connections

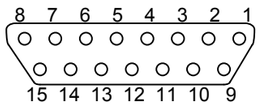

To be Developed

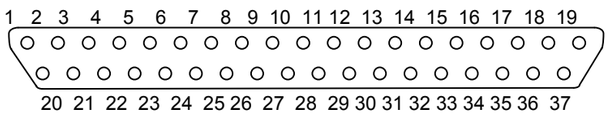

Tritium CAN Bus Interface

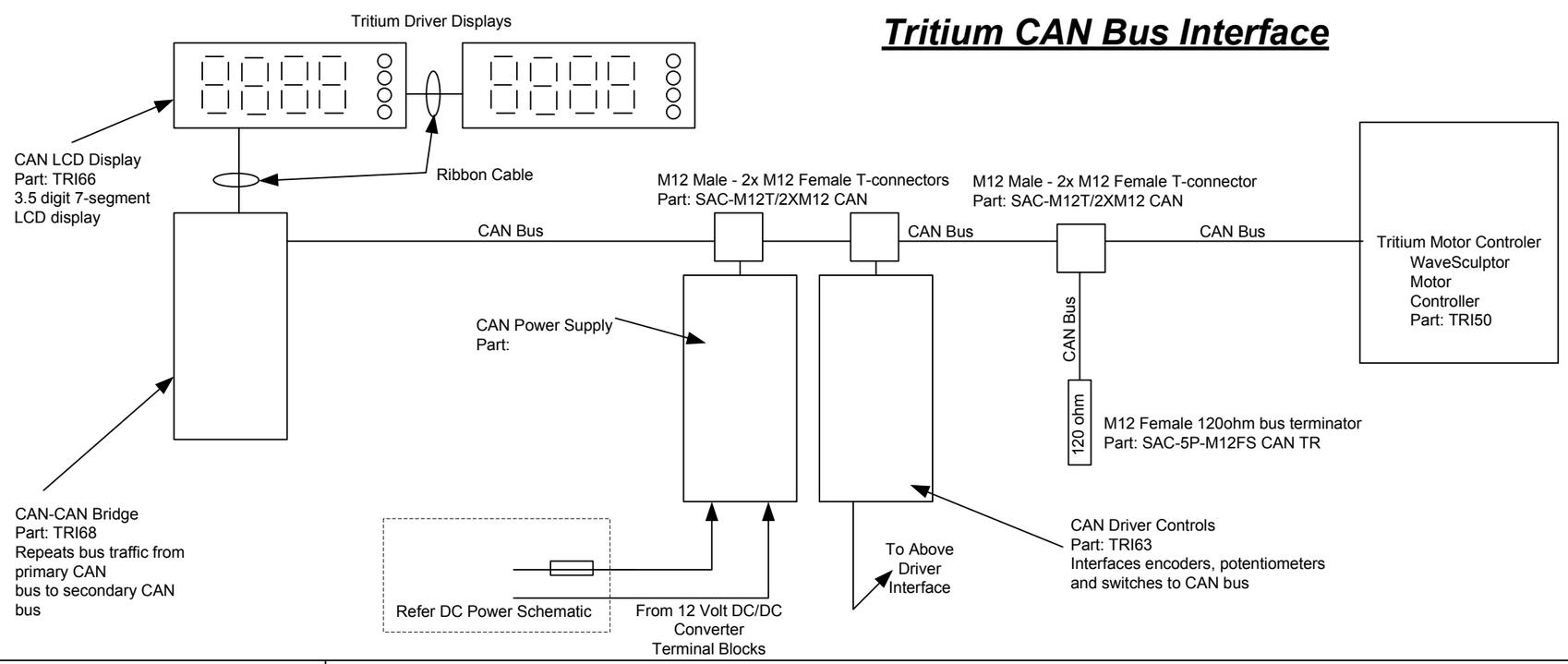

Notes:-
1. This drawing reflects all design inputs currently known at the time.
2. This schematic should not be considered as complete
3. Drawing not to scale.

"Kelly" – Tritium CAN Bus, Horn & Indicator Interface – As built

Revisions:
A Issued as draft
B Added wiring details for steering controls & other general information.

Do Not Use for Solar Spirit

Drawn By Ian Rowley	Drawn 25/9/09	Version B	Sht 1 of 1